# Austview Sashless Double Glazed Horizontal Slider Fixed to Timber Frame with Timber Guides

## Head, Sill and Jamb
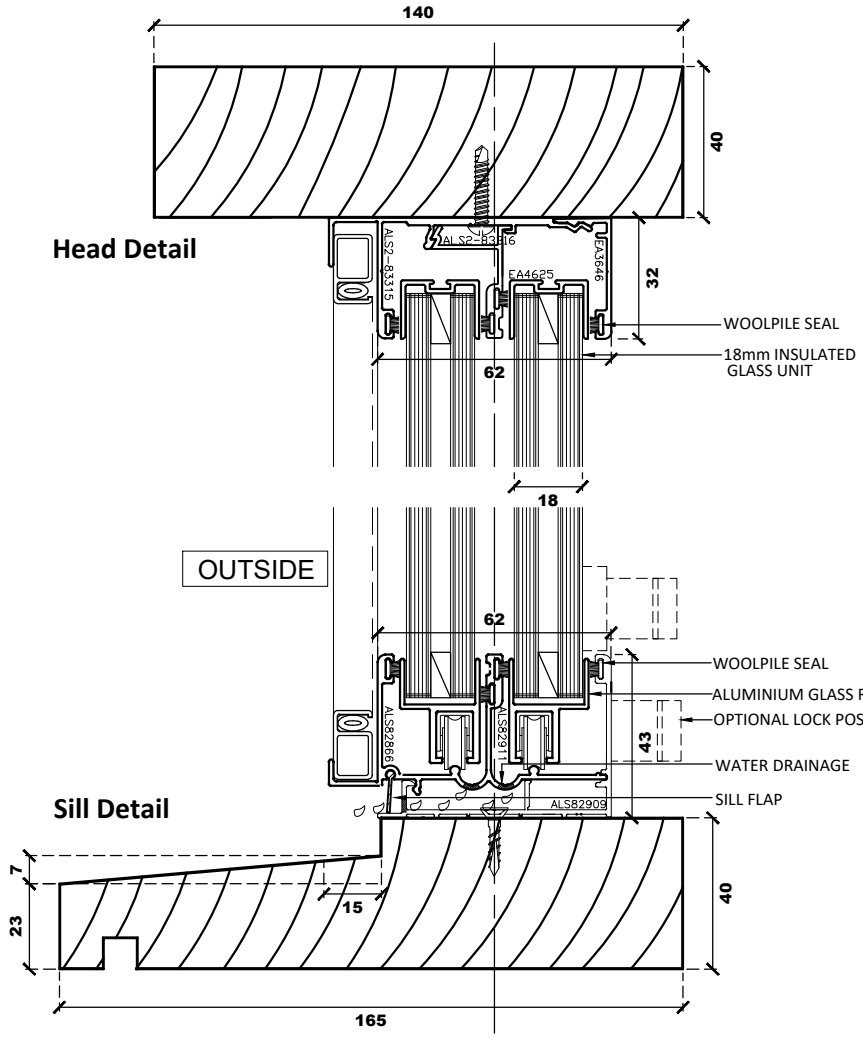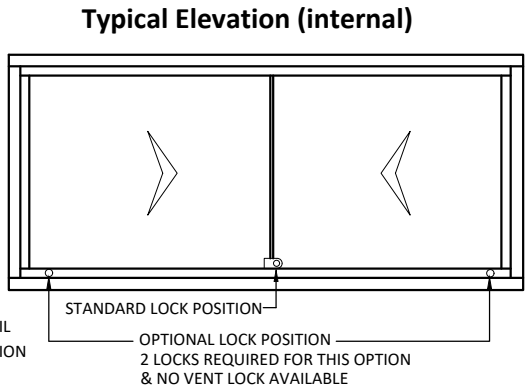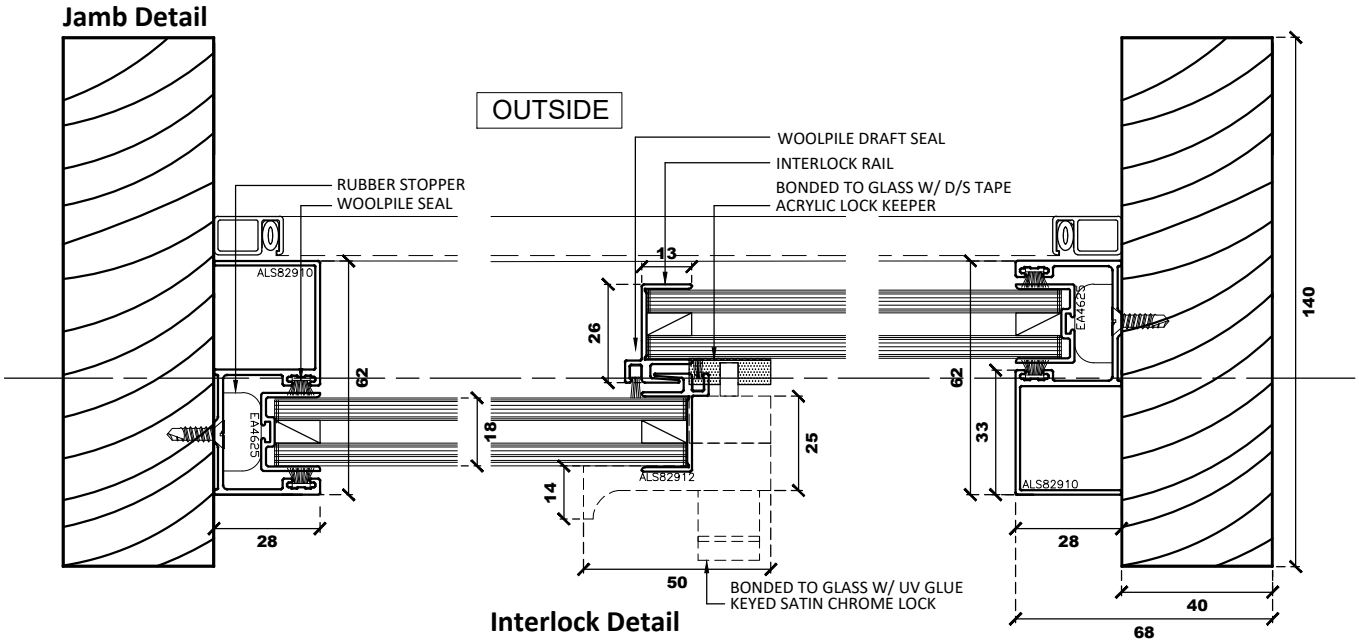
Scale 1 : 2